GENIUS 180

Ultra Micro EP Helicopter

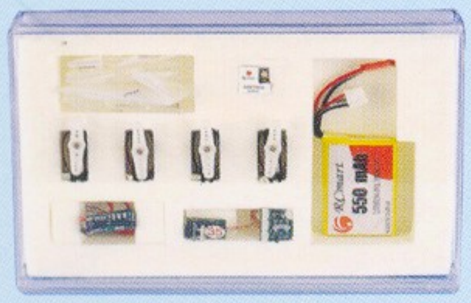

AIRTRIX ECP (JST)

STD ECP (UNI)

MOCO ECP (UNI)

Specifications:

Overall length: 345 mm
Main rotor diameter: 340 mm
Tail rotor diameter: 100 mm
Main rotor control system: CCPM
Motor: 180 size (standard)
Flying weight: About 190g
Flying duration: 6 ~ 12 minutes

RCmart International, Inc.

No. 4, Alley 2, Lane 143, Shin Tai Wu Rd., Sec.1,
Shijr City, Taipei Hsien 221, Taiwan, R.O.C.

Tel : +886-2-2642-5776
Fax : +886-2-2642-5786
URL: www.rcmart.com.tw

TRANSMITTER STICK CONTROLS AND HELICOPTER MOVEMENT

MODE-I

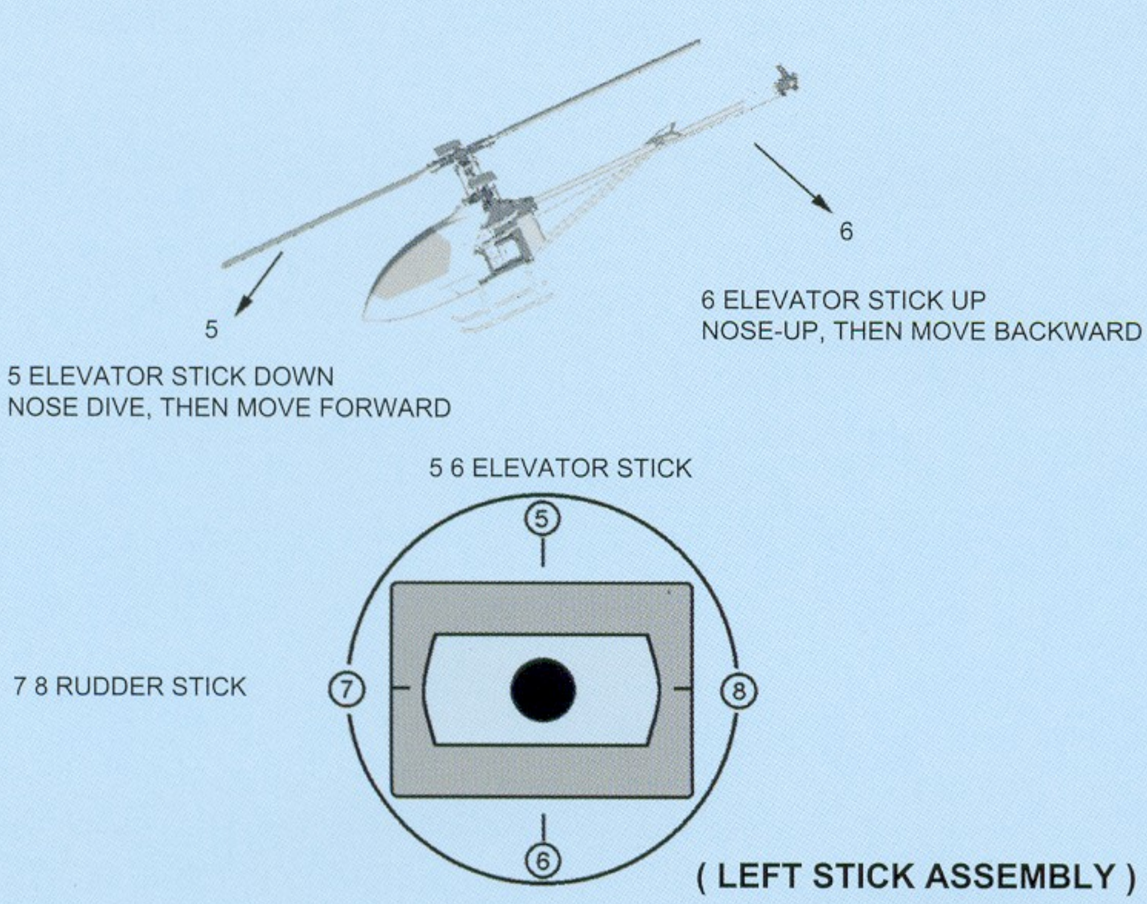

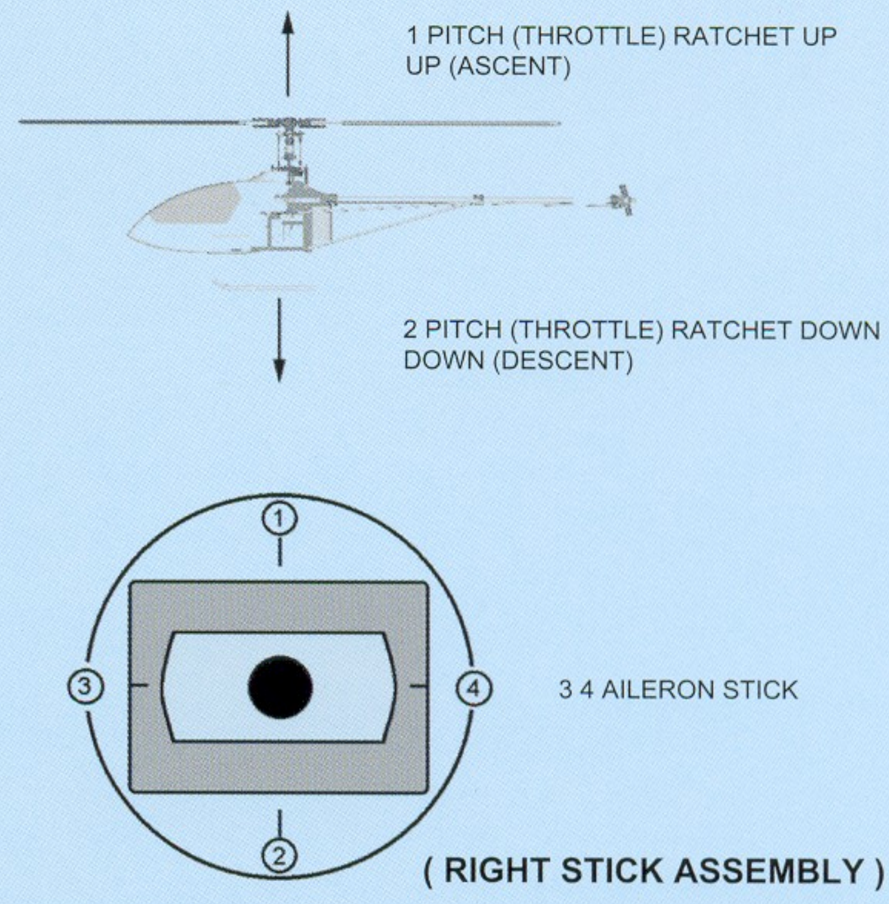

MODE-II

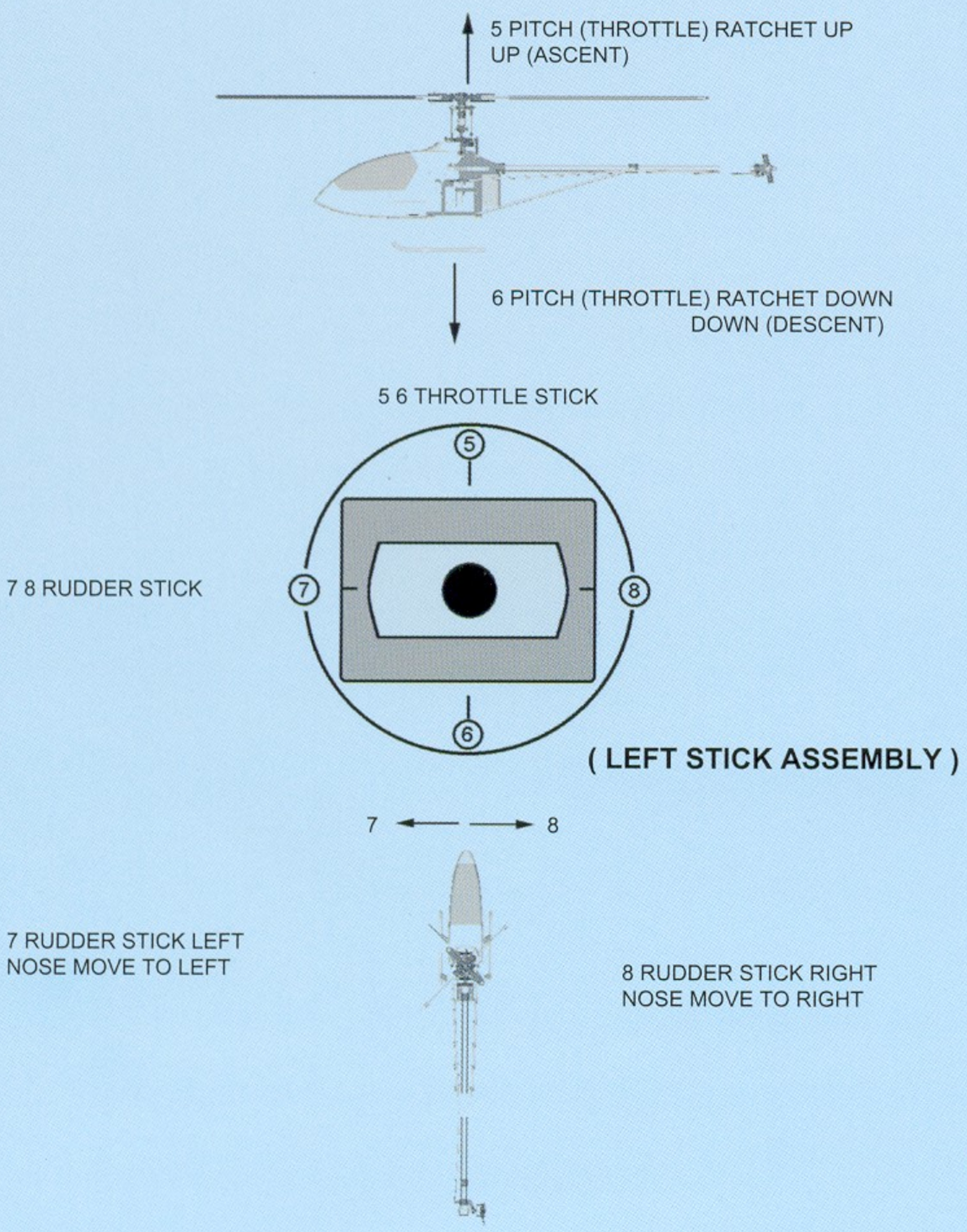

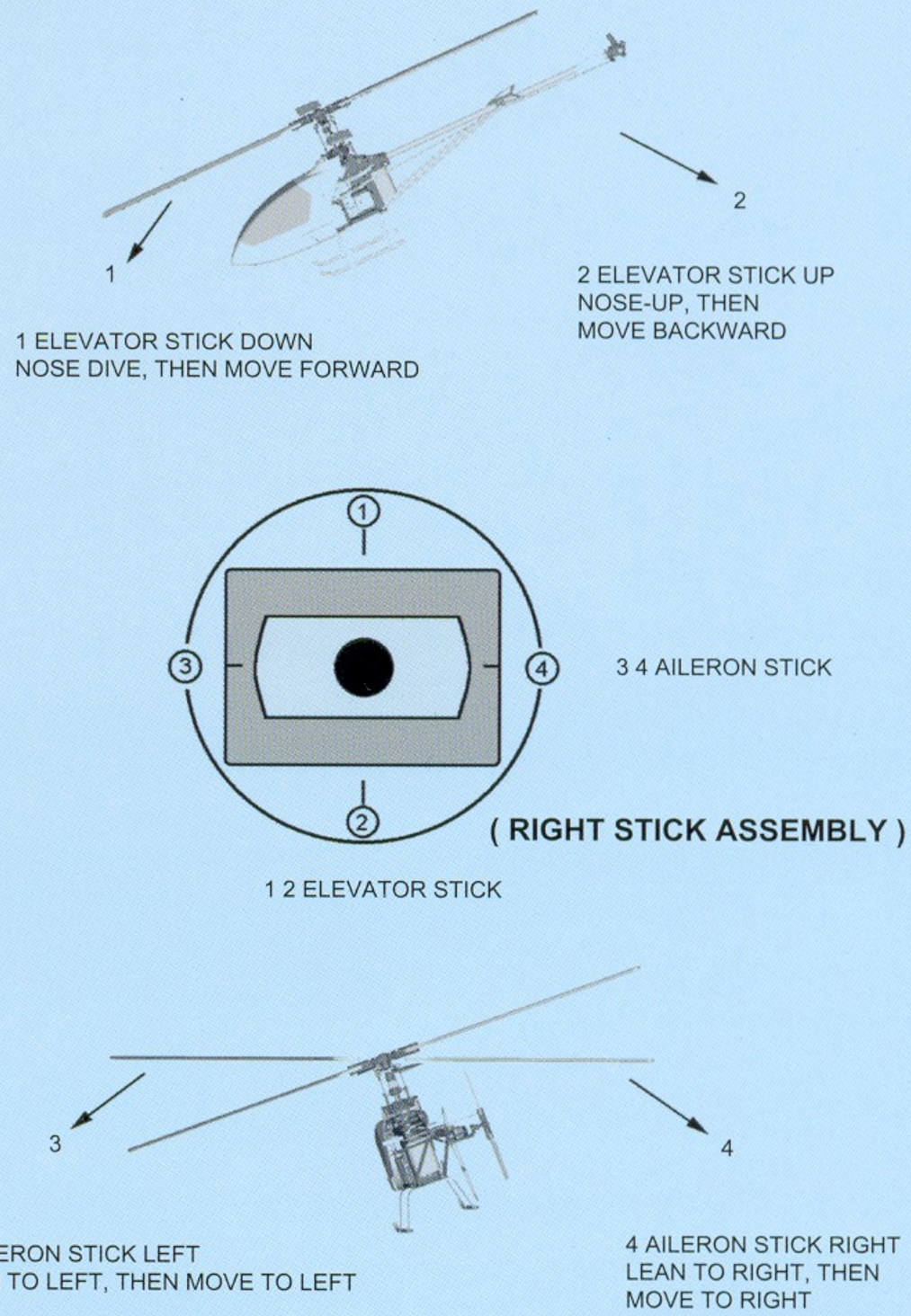

Installing The Servos

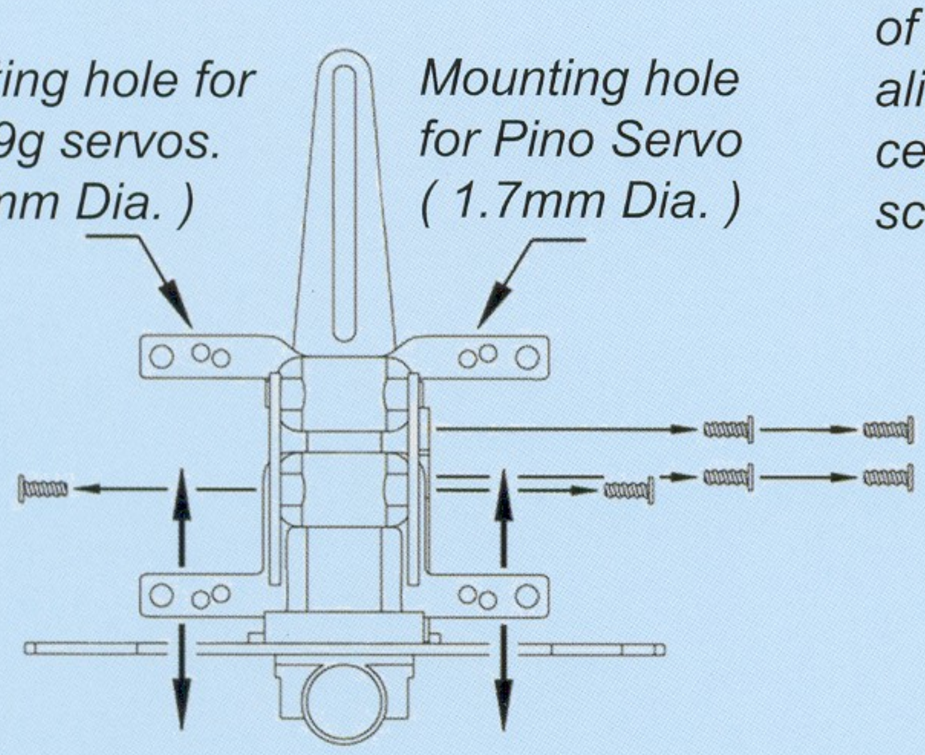

1.Make sure the upper race of servo plate support is aligned with the top of central boom. Tighten two screws of upper support.

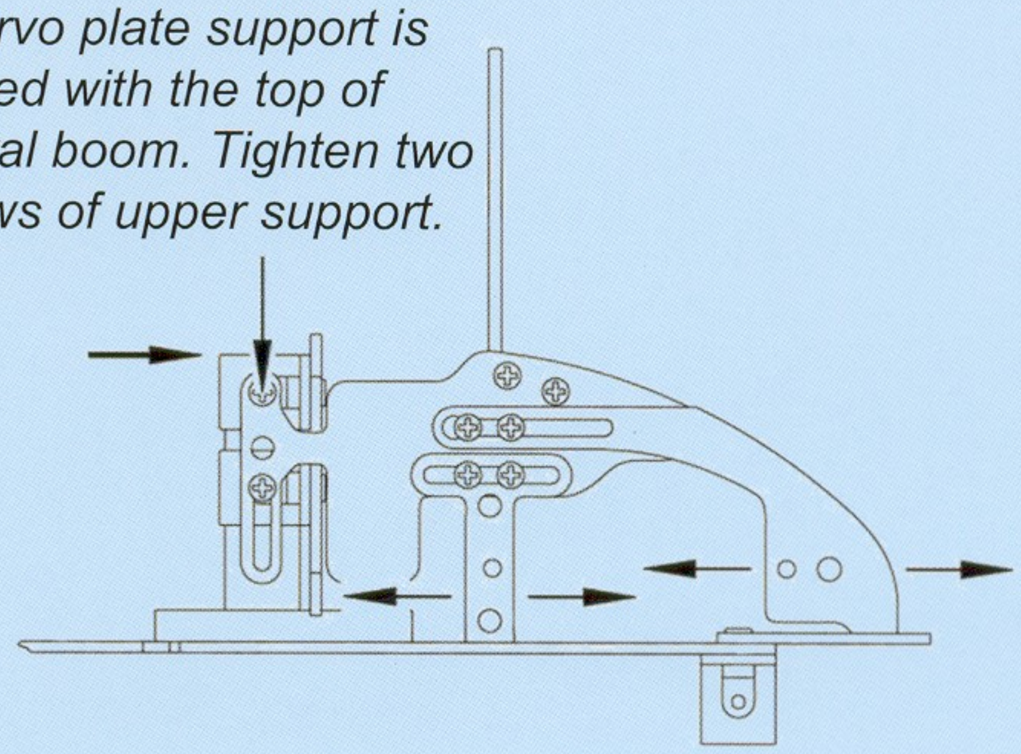

2.Slide the lower servo support up or down to fit the size of servo, tighten the screws of the lower support and mount the servos onto the plates. (Aileron Servo & Pitch Servo)

3.Loosening the four screws of the front & rear servo mounts, adjust the mounts to fit the size of Elevator Servo, retighten the screws and mount the servo onto the plates.

IMPORTANT: 4.Use few drops of C/A to adhere the bottoms of the mounts after Step 3. (Make sure that the mounts will not move up and down.)

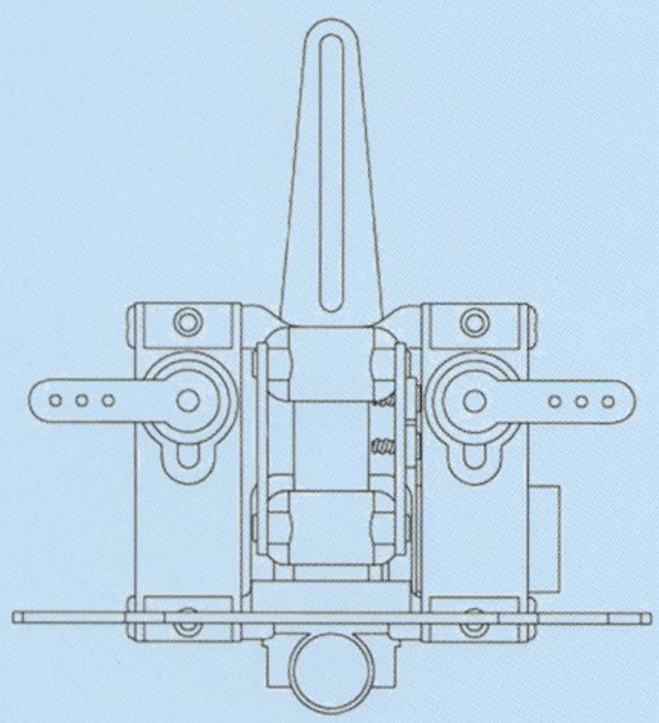

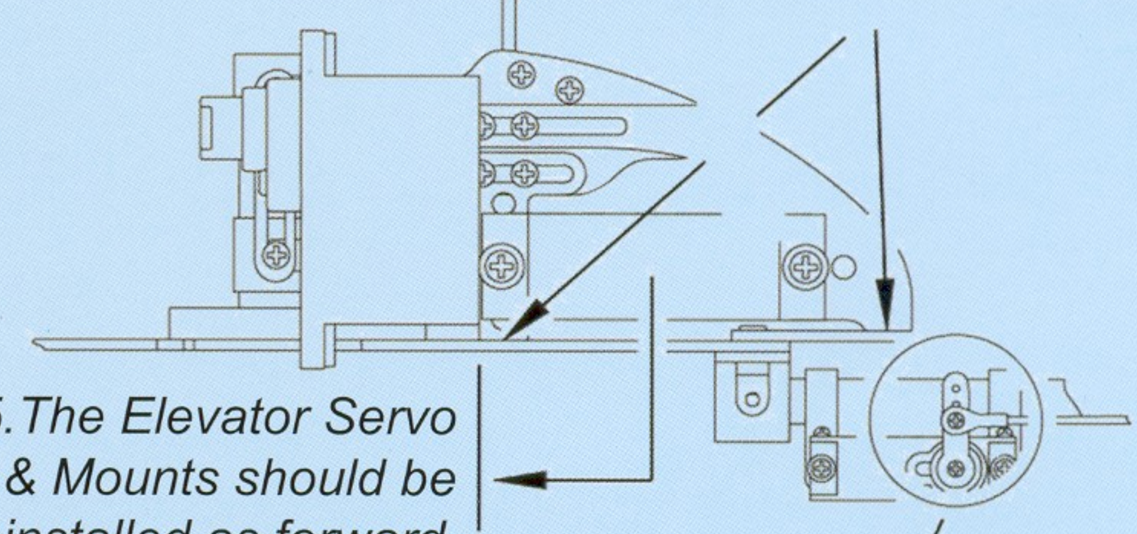

5.The Elevator Servo & Mounts should be installed as forward as possible.

6.Gyro setup:

First, if you're using a heading lock gyro, you must make sure the transmitter REVO MIXING option is disabled, because this option is only for non-heading lock gyros.

Second, make sure the servo arm stay at the center when you switch between two gyro sensitivity settings, if it turns little by little in the heading lock mode, adjust it by rudder trim. (The components of heading lock gyro are sensitive to the temperature, repeat this step occasionally.)

Third, secure the ball link to the servo arm (the first hole from inner side), if the tail wags too much below gain 60%, drill a new hole at the inner side of the servo arm, repeat this step and retest. (The gain should be set to about 75% and no tail wag.)

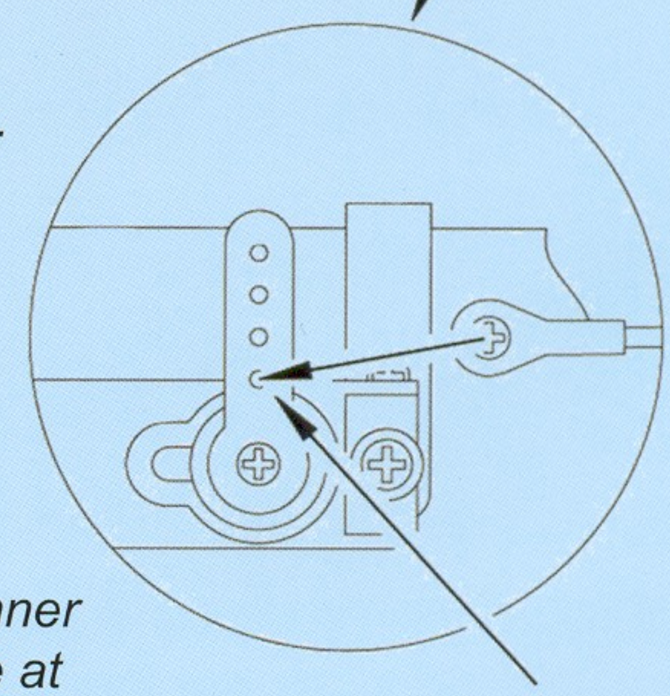

Drill a new hole at the inner side.

Electronics Mounting & Wiring

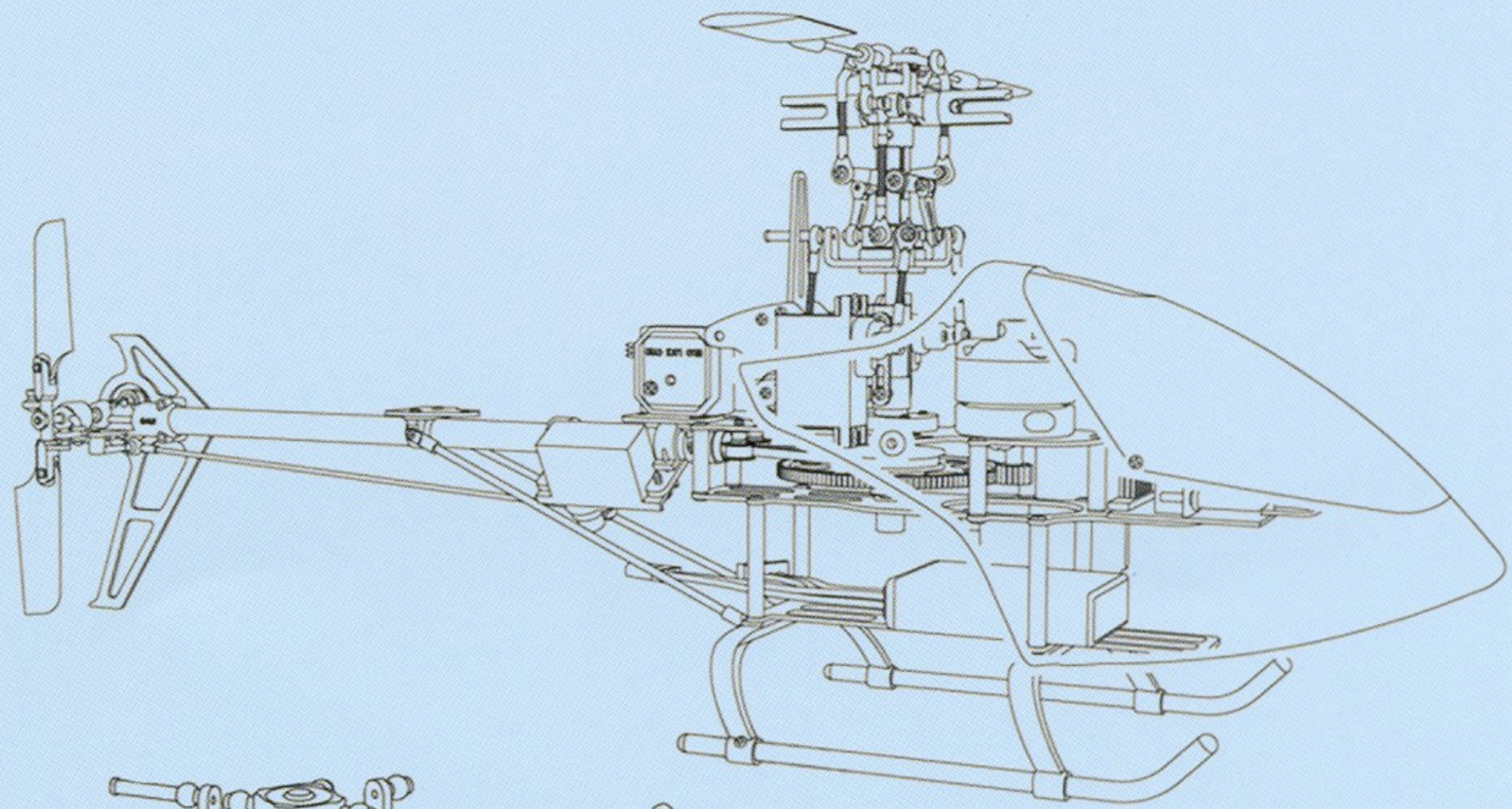

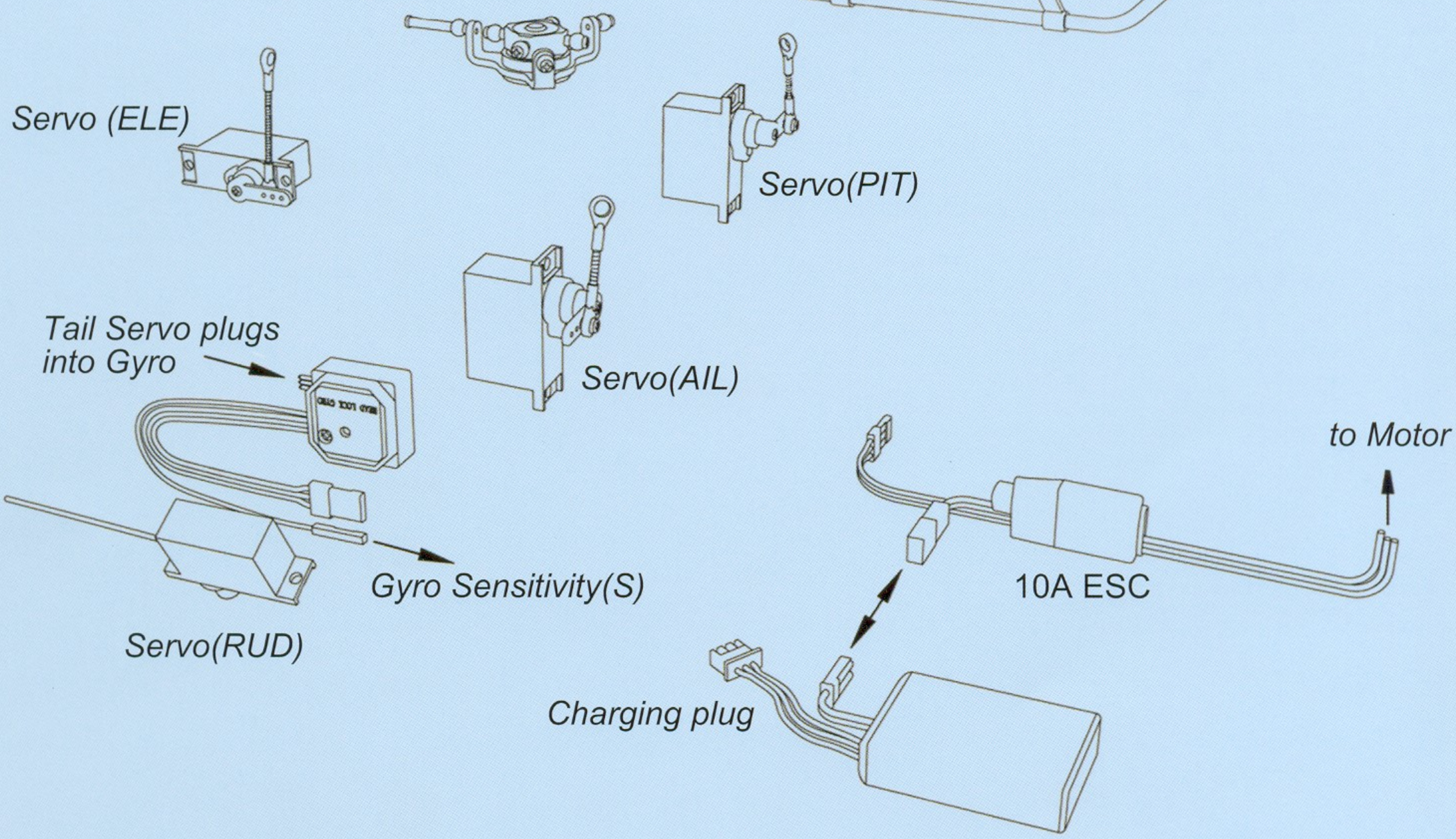

	FUTABA	HITEC	JR	Sanwa	Pino Servo	ESC	GYRO
CH1		(AIL)	ESC				
CH2		(ELE)	(AIL)				
CH3		ESC	(ELE)				
CH4		GYRO	GYRO				
CH5		Gyro Gain Plug(S)	Gyro Gain Plug(S)				
CH6		(PIT)	(PIT)				
CH7							
Gyro Socket		(RUD)	(RUD)				
Signal (S)	White	Orange	Orange	Blue	Orange	White	Orange
Positive (+)	Red	Red	Red	Red	Red	Red	Red
Negative (-)	Black	Black	Brown	Black	Brown	Black	Brown

Important :

Reading the setup instructions of swashplate type and servo connections for different transmitters.

Pitch Setting

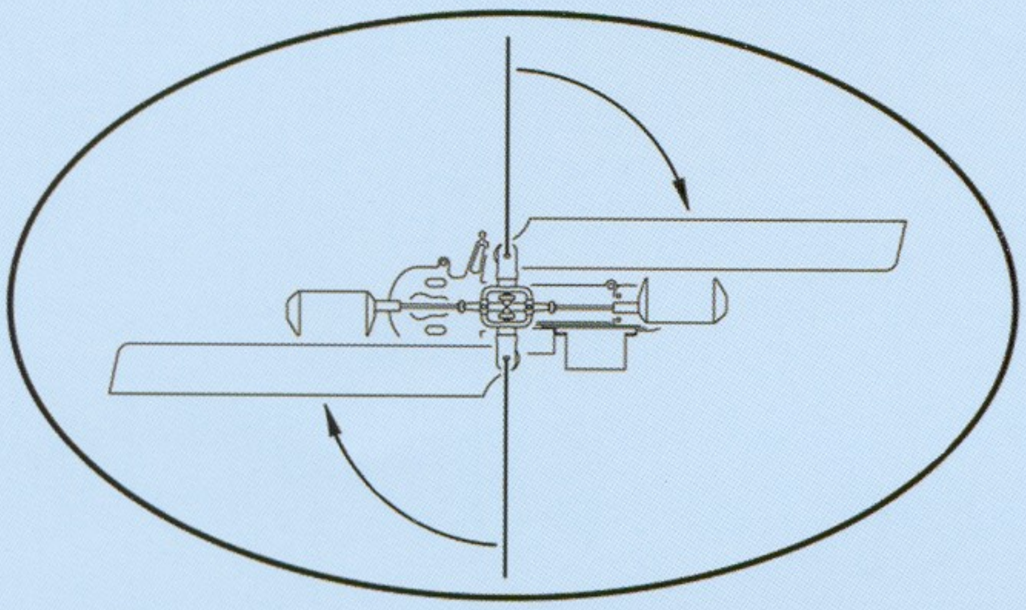

Rotate each blade by clockwise and let the blades are parallel to the flybar.(Top View)

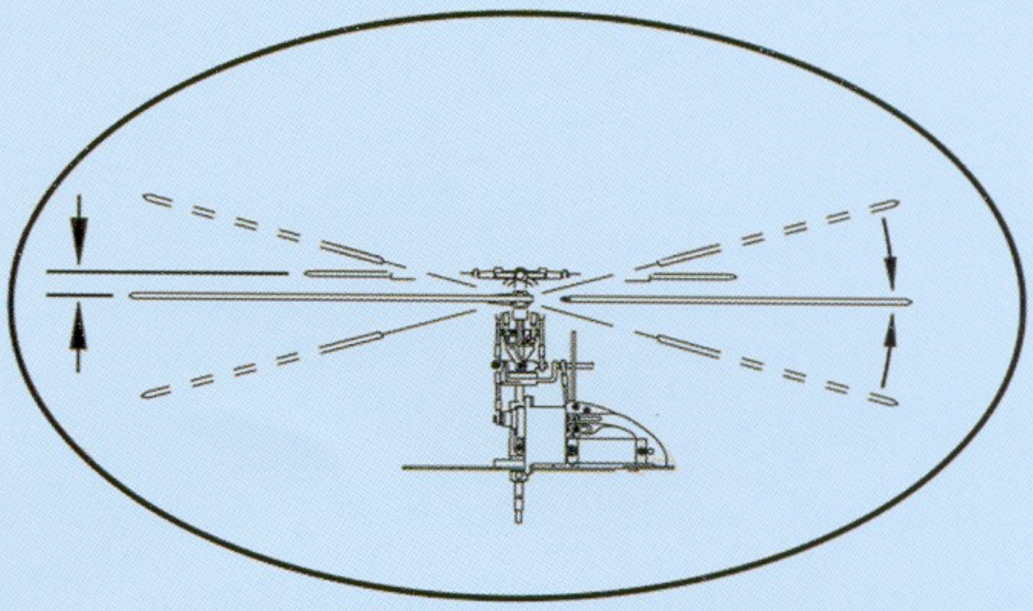

Slide the swashplate up or down, let the blades be parallel to the flybar (Left View). The collective pitch angle is zero at this position.

Collective Pitch	*Distance A*
+12~+13	12 mm
+5~+6	9.8 mm
0	7.8 mm
-5~-6	5.8 mm
-12~-13	3.5 mm

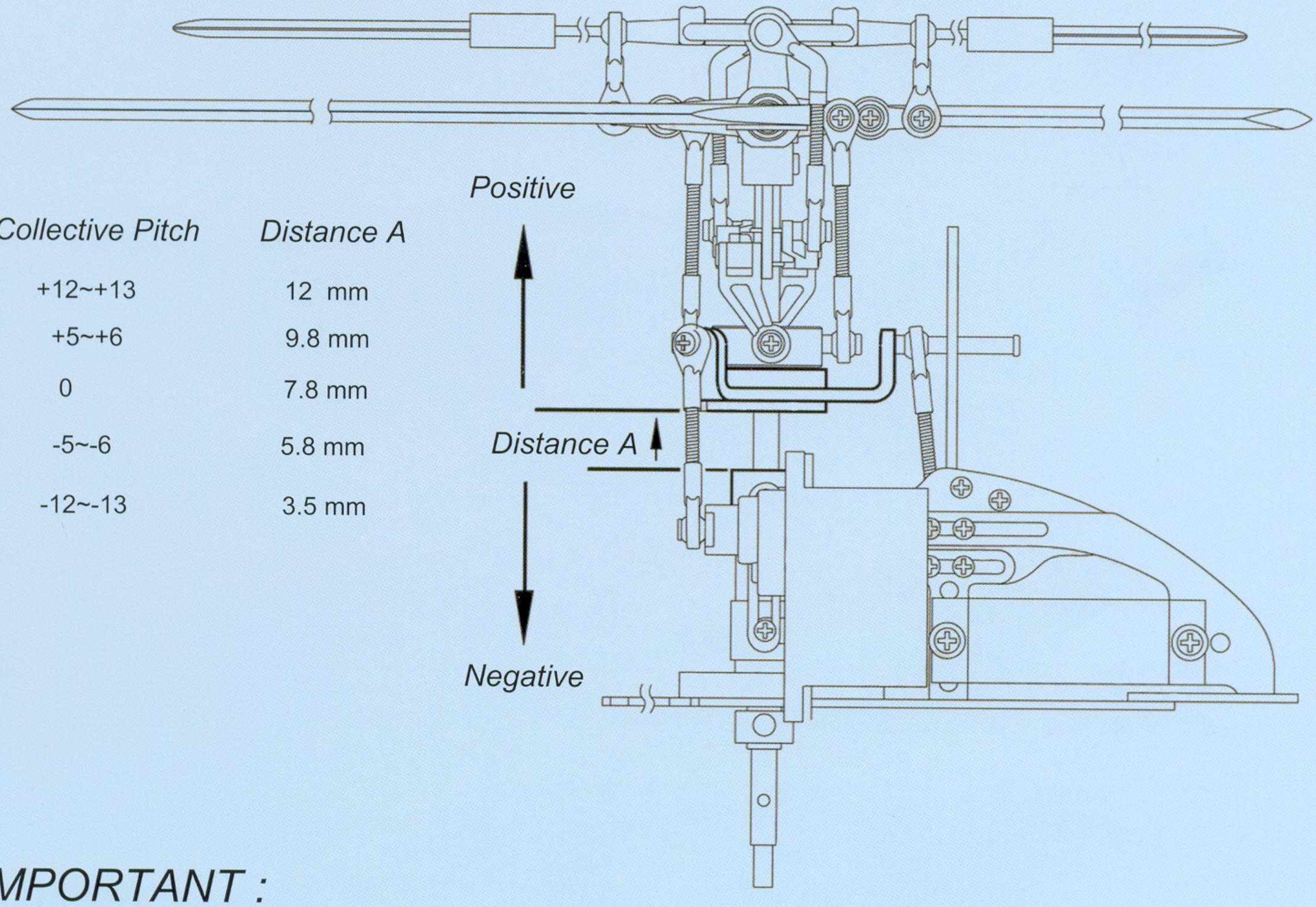

IMPORTANT :

1. *The data above varies according to the types of main blades, motor, pinion gear and battery.*

2. *The recommended rotating speed is 3500 RPM or more, if the rotor head is swinging around while hovering, decrease the collective pitch and increase the rotating speed.*

3. *Both blades should be balanced before the first time used.*

Assembly-1

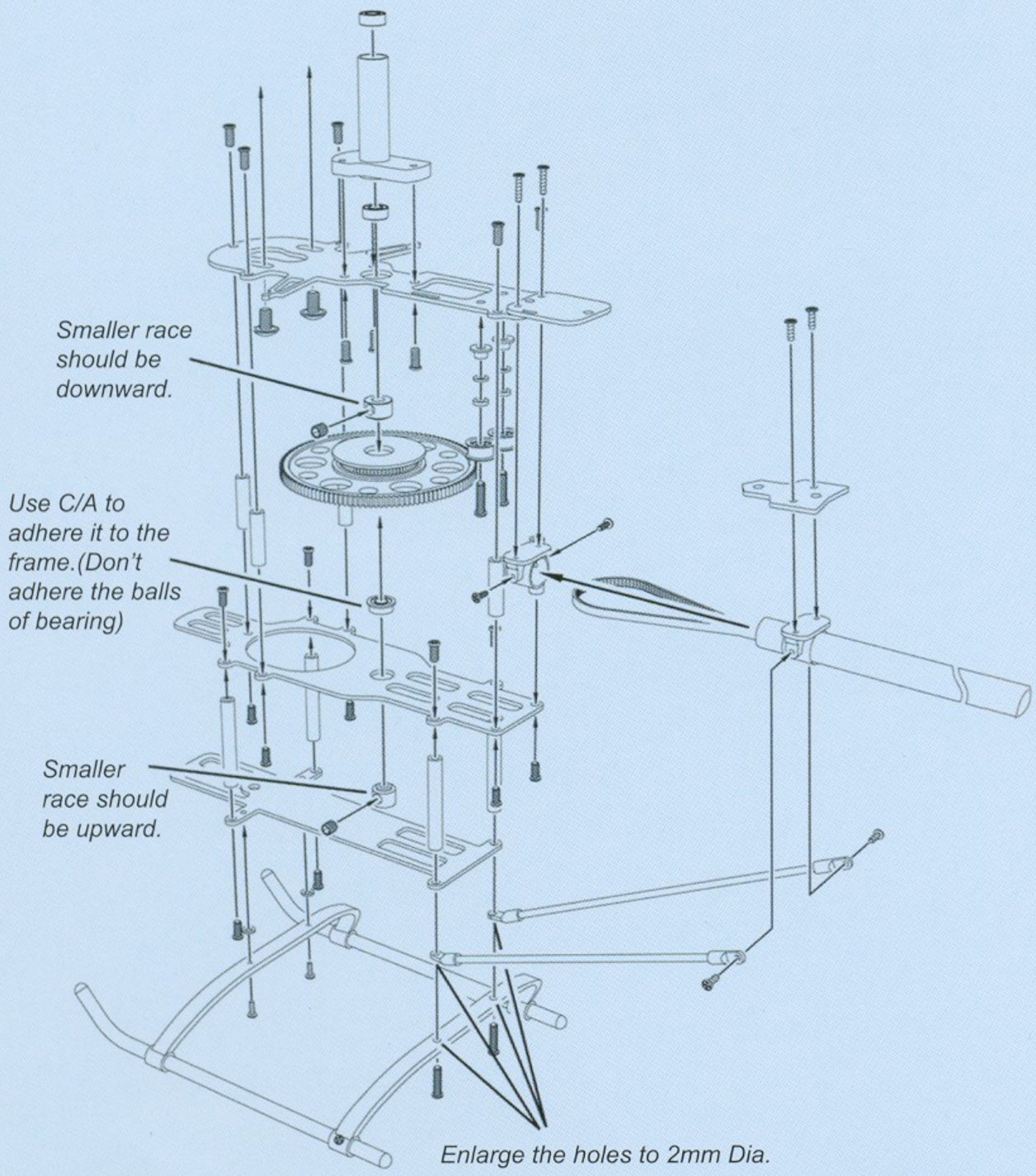

Assembly-2

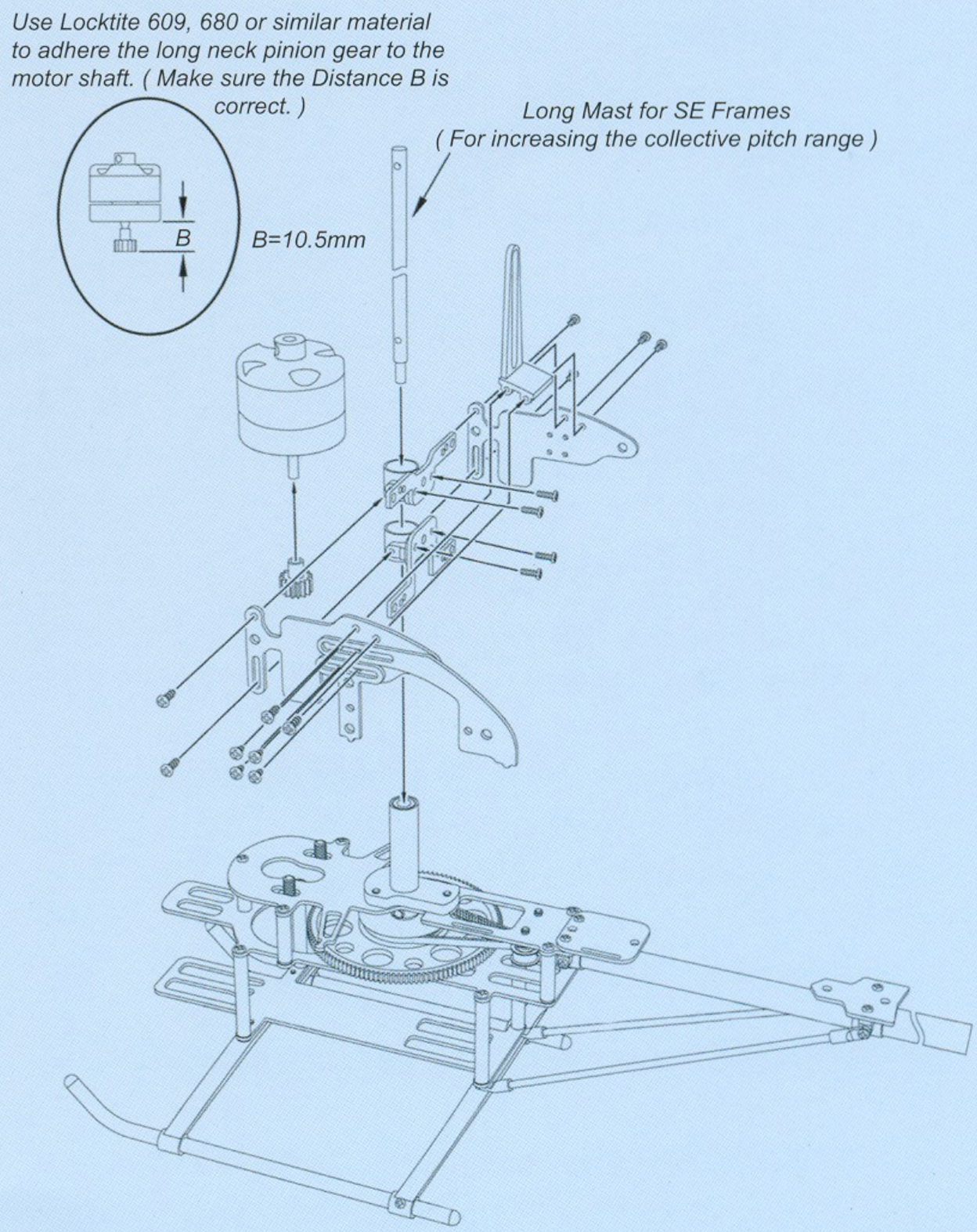

Replacement & Optional Parts

203040 See-Saw Set	203070 Tail Gear Case Set	203080 Tail Rotor Blades Pack	203110 Stabilizer Blades Pack	203120 Tail Output Shaft Set
203130 Tail Rotor Grip (With Hub) Set	203140 Tail Pitch Control Set	203151 Belt Guiding Wheel (with bearing) x 2pcs	203160 Canopy & Decal	203180 Landing Gear Brace Set
203190 Tail Booms Pack	203194 CF Tail Boom (Black)	203195 CF Tail Boom (Silver)	203200 Tail Boom Support Set	203222 Main Shafts Pack (Long)
203230 Mast Collars Pack (S)	203231 Mast Collars Pack (L)	203240 Flybars Pack	203241 Flybar Adaptors Pack	203242 Flybar Adaptors (Stable Mode)
203260 Landing Gear Skids Pack	203270 Ball Bearings (1.4x2x2) x 2pcs	203280 Ball Bearings (2x5x2.5) x 3pcs	203290 Ball Bearings (3x6x2.5) x 2pcs	203300 E385 Main Rotor Blades Pack
203301 N012 Main Rotor Blades Pack	203302 Main Rotor Blades Pack (Wood)	203303 Main Rotor Blades Pack (Fiber)	203311 Damper Rubbers Pack	203321 Metal Parts For SE Frames
203322 Linkage Set (for SE)	203411 Main Frame Plate - Flat	203421 Main Frame Plate - Multi Angle	203431 Main Frame Plate - Round Hole	203461 Central Boom Assembly

Replacement & Optional Parts

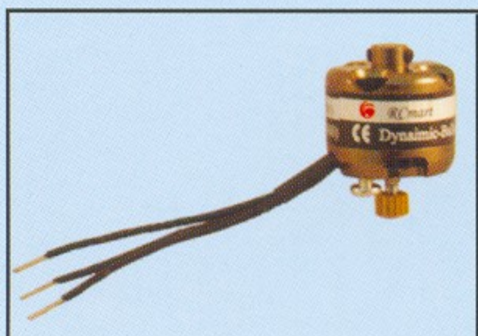	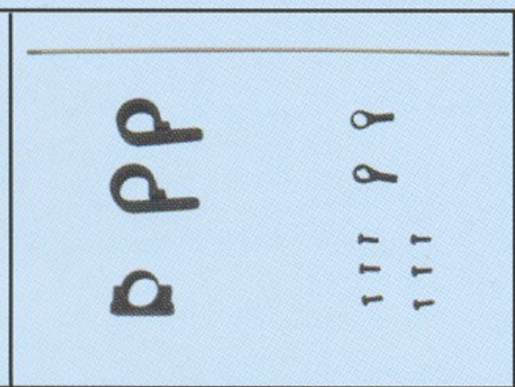	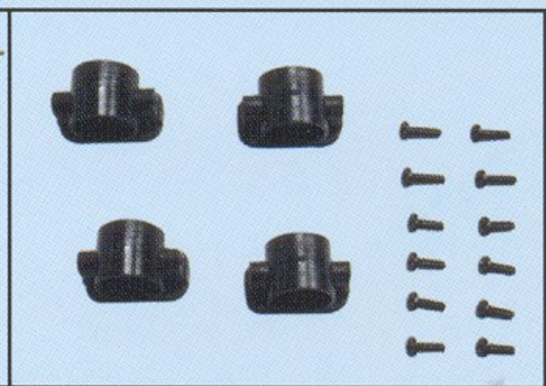	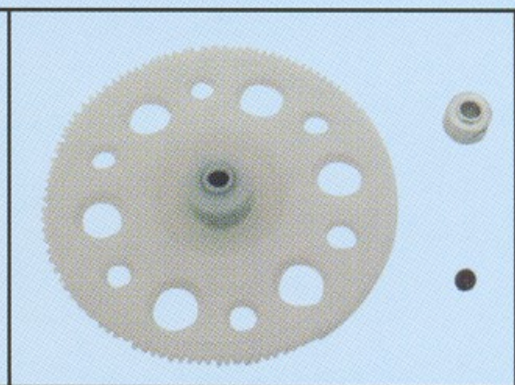	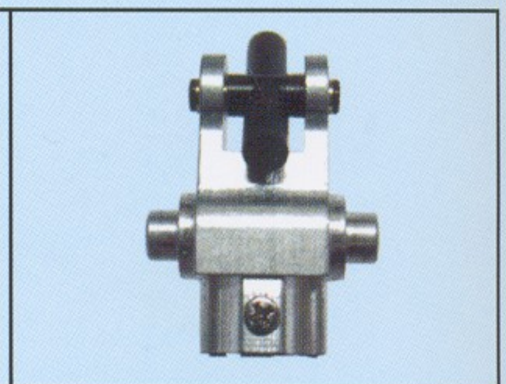
203502 BL-Motor (with 15T Gear & Neck)	203530 Boom Clamps & Rudder Linkage	203531 Boom Supports Pack	203540 Main Gear With Bearing	203550 Metal Rotor Yoke Set
	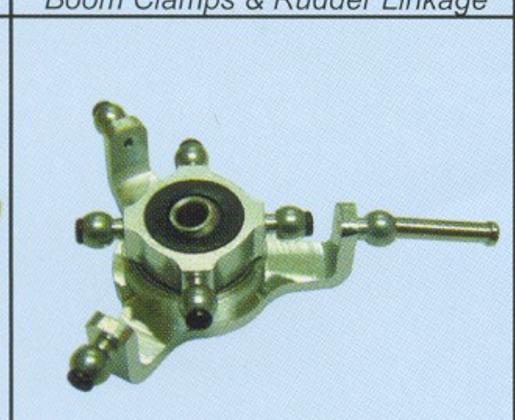	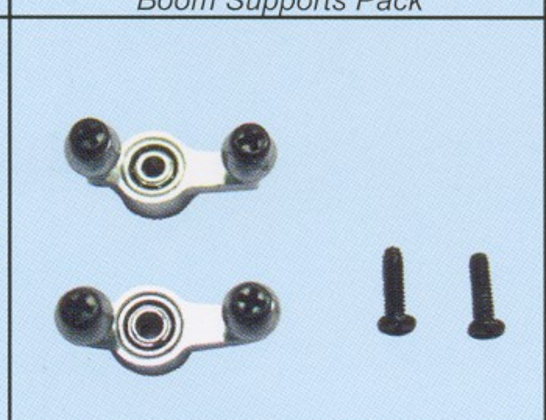	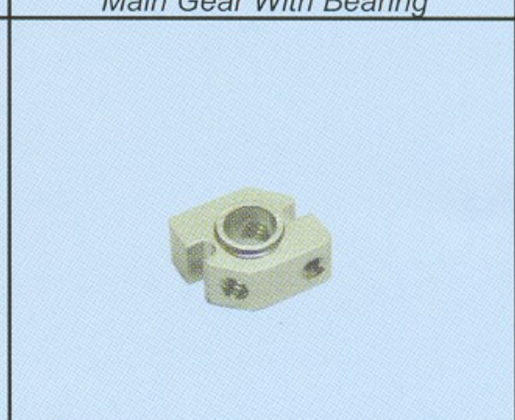	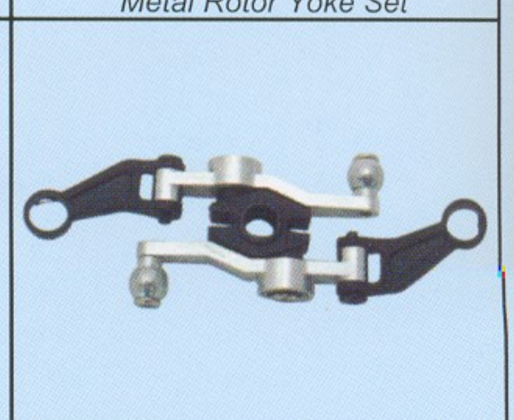
203560 Metal Main Grips Set	203570 Metal Swashplate Assembly	203580 Metal See-Saw Arms	203581 Metal Washout Base	203590 Metal Washout Arms Set
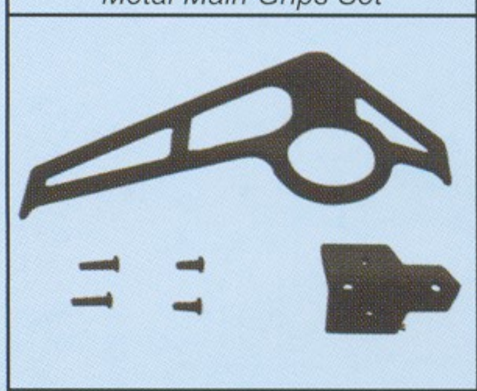	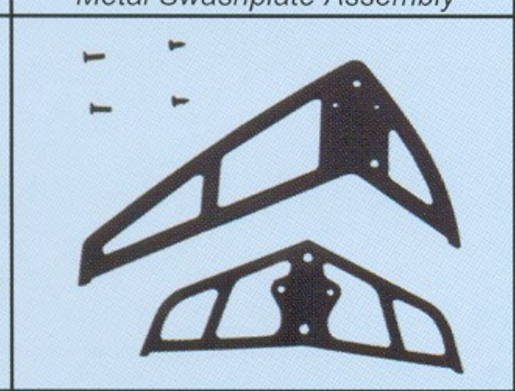	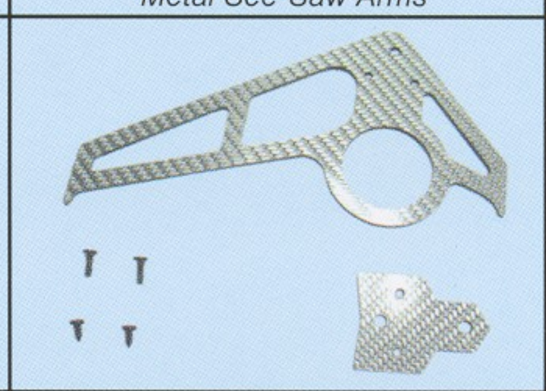	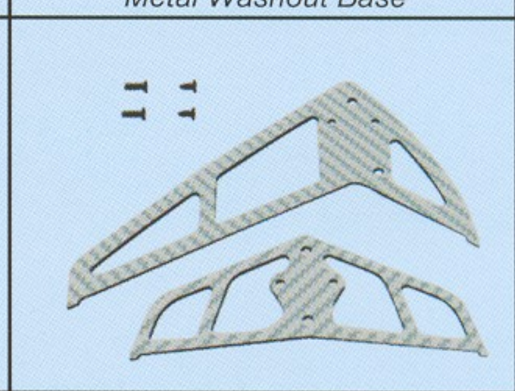	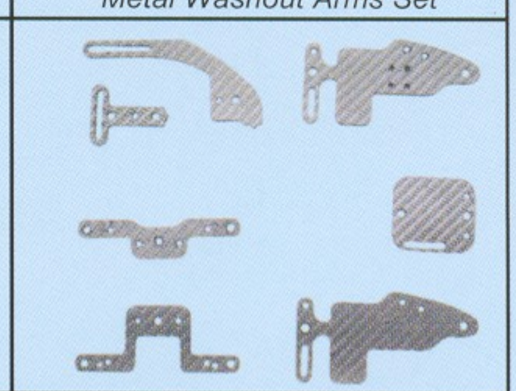
203601 CF Fin & Stabilizer - Round (Black)	203602 CF Fin & Stabilizer - Curve (Black)	203603 CF Fin & Stabilizer - Round (Silver)	203604 CF Fin & Stabilizer - Curve (Silver)	203606 Servo Mounts Pack
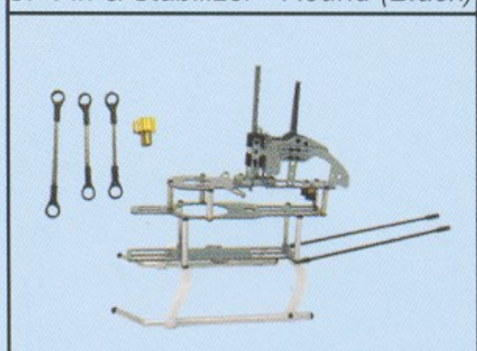			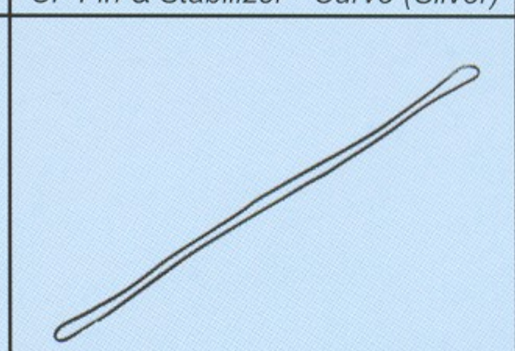	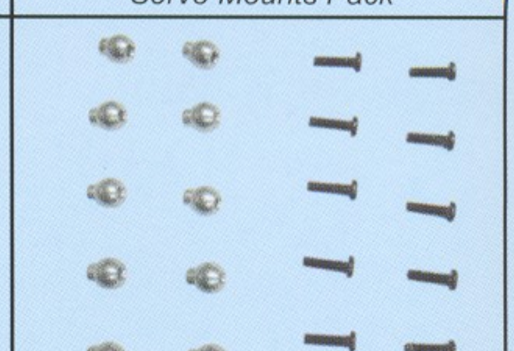
203610 SE Frames Set	803725 Flange Bearing x 1pc	832010 Spindle Shaft (M2 Screw)	861901 Tail Rotor Belt	883503 Metal Balls Pack
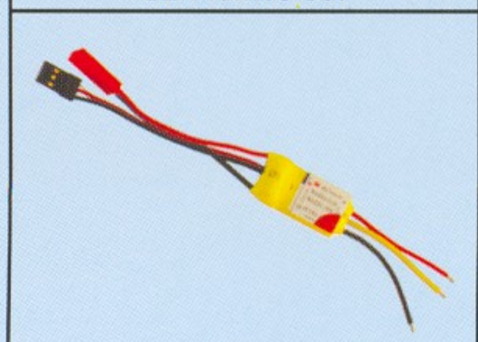	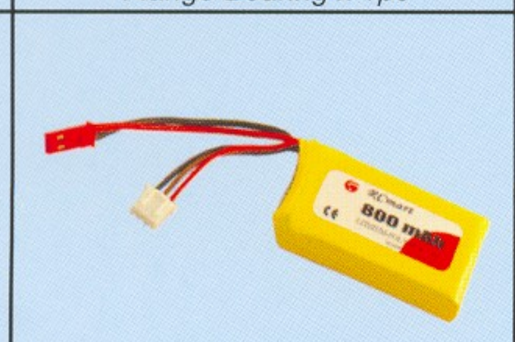			
923101 BLESC-10A (for BL-Motor)	926080 Li-Po Battery (7.4v 800mah)	203521 Scale Fuselage SC-300	203522 Scale Fuselage BE-206	203523 Scale Fuselage AS-350

RCmart Optional Electronic Components

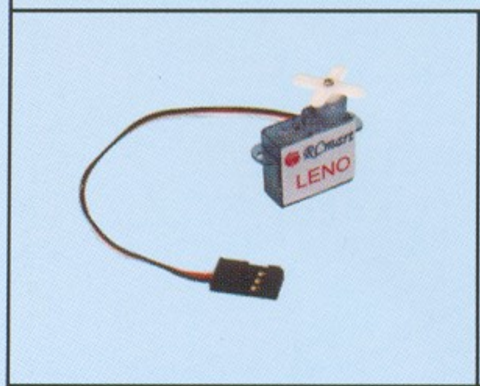	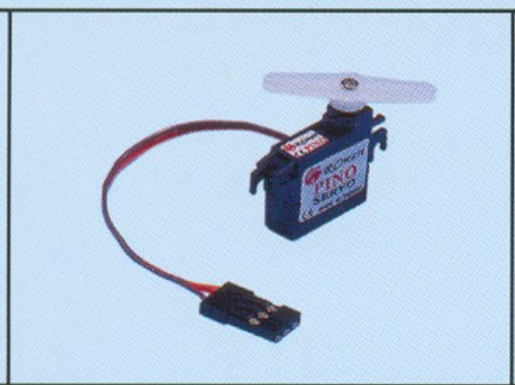		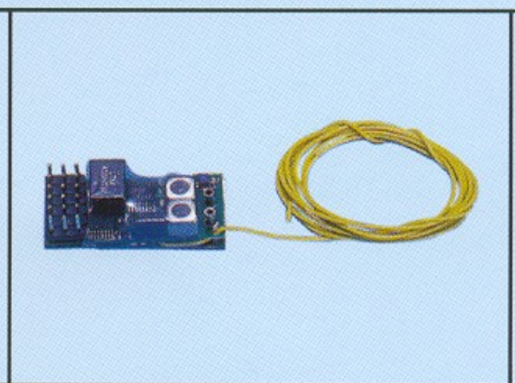	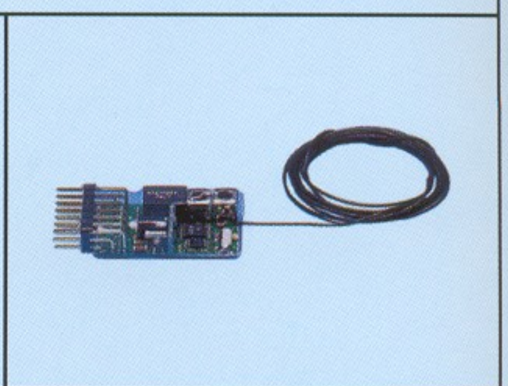
LENO servo(4.58g)	PINO-MG servo(6.45g)	MOCO servo(9.85g)	R4-6CH Receiver(6CH)	R5-7CH Receiver(7CH)
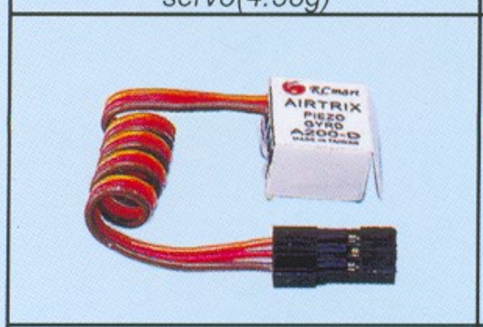				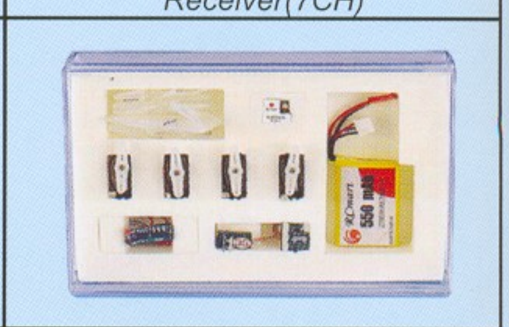
A200-D Micro piezo Gyro	NT-400 Head Lock Gyro	A500-G Head Lock Gyro	STD ECP(UNI)	AIRTRIX ECP(JST)